STR 040V 1-Stage and 2-Stage Specifications with VRSF-B

Frame Size	**040V**					
Stage			**1-Stage**	**2-Stage**		
Ratio	Units	Notes	15	45	75	135
Nominal Torque	[Nm]	*1	27	27	27	27
Acceleration Torque	[Nm]	--	58	58	58	58
No Load Torque	[Nm]	*1	0.5	0.2	0.2	0.2
Nominal Input Speed	[rpm]	*2	900	2700	3000	3000
Maximum Input Speed	[rpm]	*2	3000	5000	5000	5000
Reflected Inertia (Single)	[kg-m²x10⁻⁴]	*3	0.292	--	--	--
Reflected Inertia (≤Ø 8)	[kg-m²x10⁻⁴]	*3	--	0.082	0.06	0.053
Reflected Inertia (≤Ø 14)	[kg-m²x10⁻⁴]	*3	--	0.151	0.131	0.121
Backlash	[arc-min]	--	0	0	0	0
Angular Transmission Accuracy	[arc-min]	--	≤ 1.5	≤ 1.5		
Angular Repeatability Accuracy	[arc-min]	--	± 0.2	± 0.2		
Surface Runout	[µm (max)]	--	10	10	10	10
Weight	[kg]	--	2.5	3.2	3.2	3.2
Maximum Axial Load	[N]	--	999	999	999	999
Maximum Radial Load	[N]	--	669	669	669	669
Maximum Tilting Moment Load	[Nm]	--	33	33	33	33
Efficiency	[%]	--	80	76	76	76
Protection Class	--	*4	IP54 (IP65)			

*1) At nominal input speed

*2) Speeds are at the actuator input. Limits when used with additional gearbox are higher

*3) At input shaft

*4) IP65 (wash-down) is available as an option. Contact Nidec Drive Technology for more details and our food grade options

STR 040 Dimensions with VRSF-B

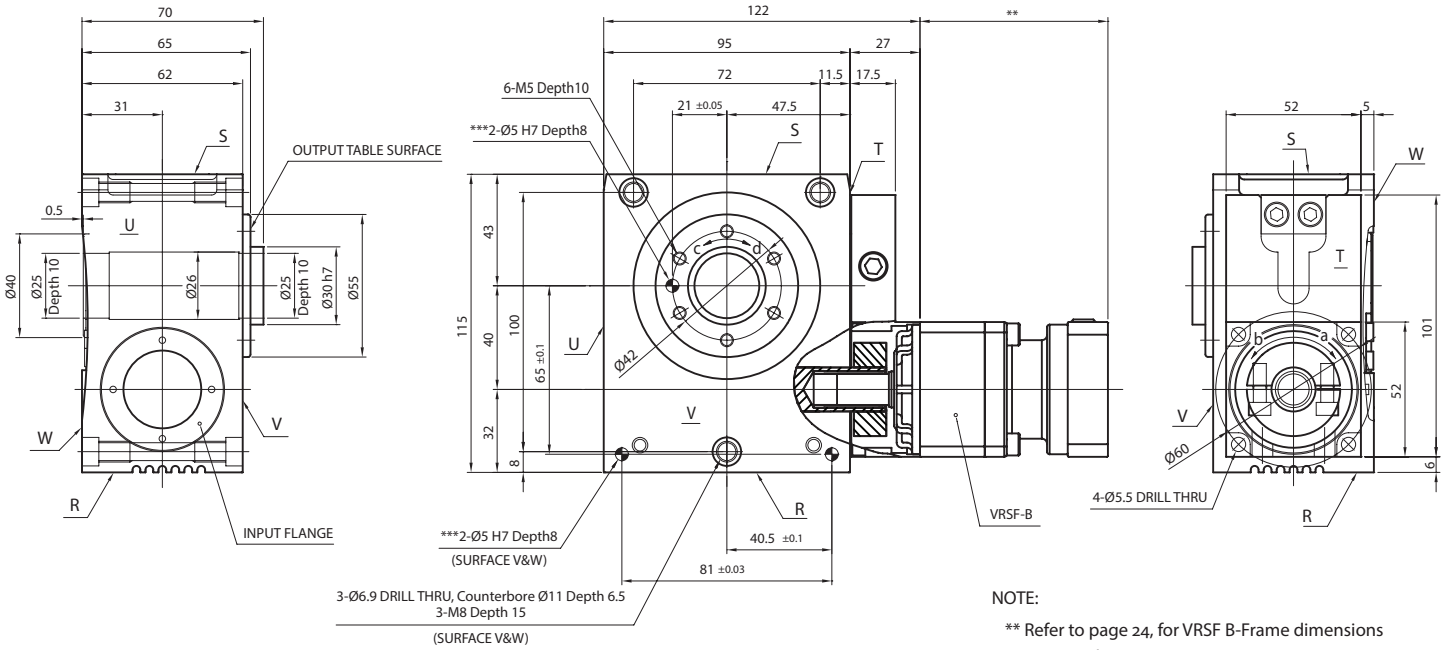

NOTE:

** Refer to page 24, for VRSF B-Frame dimensions

*** Optional

ROTATION:

a=d

a=c (upon special request)

STR 040V 3-Stage Specifications with VRSF-B

Frame Size	**040V**					
Stage	**3-Stage**					
Ratio	Units	Notes	225	300	375	525
Nominal Torque	[Nm]	*1	27	27	27	27
Acceleration Torque	[Nm]	--	58	58	58	58
No Load Torque	[Nm]	*1	0.1	0.1	0.1	0.1
Nominal Input Speed	[rpm]	*2	3000	3000	3000	3000
Maximum Input Speed	[rpm]	*2	5000	5000	5000	5000
Reflected Inertia (Single)	[kg-m^{2}x10^{-4}]	*3	--	--	--	--
Reflected Inertia (≤Ø 8)	[kg-m^{2}x10^{-4}]	*3	0.058	0.057	0.057	0.053
Reflected Inertia (≤Ø 14)	[kg-m^{2}x10^{-4}]	*3	0.131	0.131	0.131	0.121
Backlash	[arc-min]	--	0	0	0	0
Angular Transmission Accuracy	[arc-min]	--	≤ 1.5			
Angular Repeatability Accuracy	[arc-min]	--	± 0.2			
Surface Runout	[µm (max)]	--	10	10	10	10
Weight	[kg]	--	3.4	3.4	3.4	3.4
Maximum Axial Load	[N]	--	999	999	999	999
Maximum Radial Load	[N]	--	669	669	669	669
Maximum Tilting Moment Load	[Nm]	--	33	33	33	33
Efficiency	[%]	--	72	72	72	72
Protection Class	--	*4	IP54 (IP65)			

*1) At nominal input speed

*2) Speeds are at the actuator input. Limits when used with additional gearbox are higher

*3) At input shaft

*4) IP65 (wash-down) is available as an option. Contact Nidec Drive Technology for more details and our food grade options

STR 040 Dimensions with VRSF-B

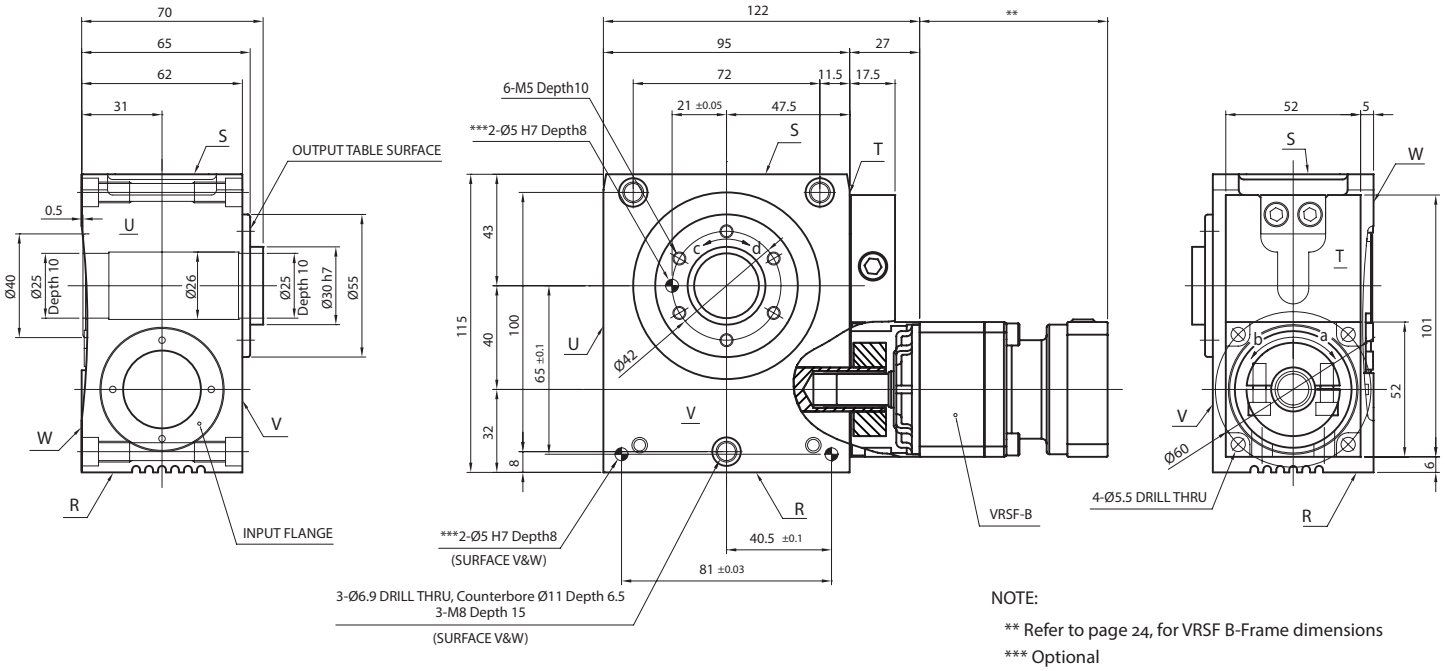

NOTE:

** Refer to page 24, for VRSF B-Frame dimensions

*** Optional

ROTATION:

a=d

a=c (upon special request)

STR